D/A-Converts

Jian-Jia Chen
(slides are based
on Peter Marwedel)
Informatik 12
TU Dortmund
Germany

2015年11月24日

Embedded System Hardware

Embedded system hardware is frequently used in a loop (***"hardware in a loop"***):

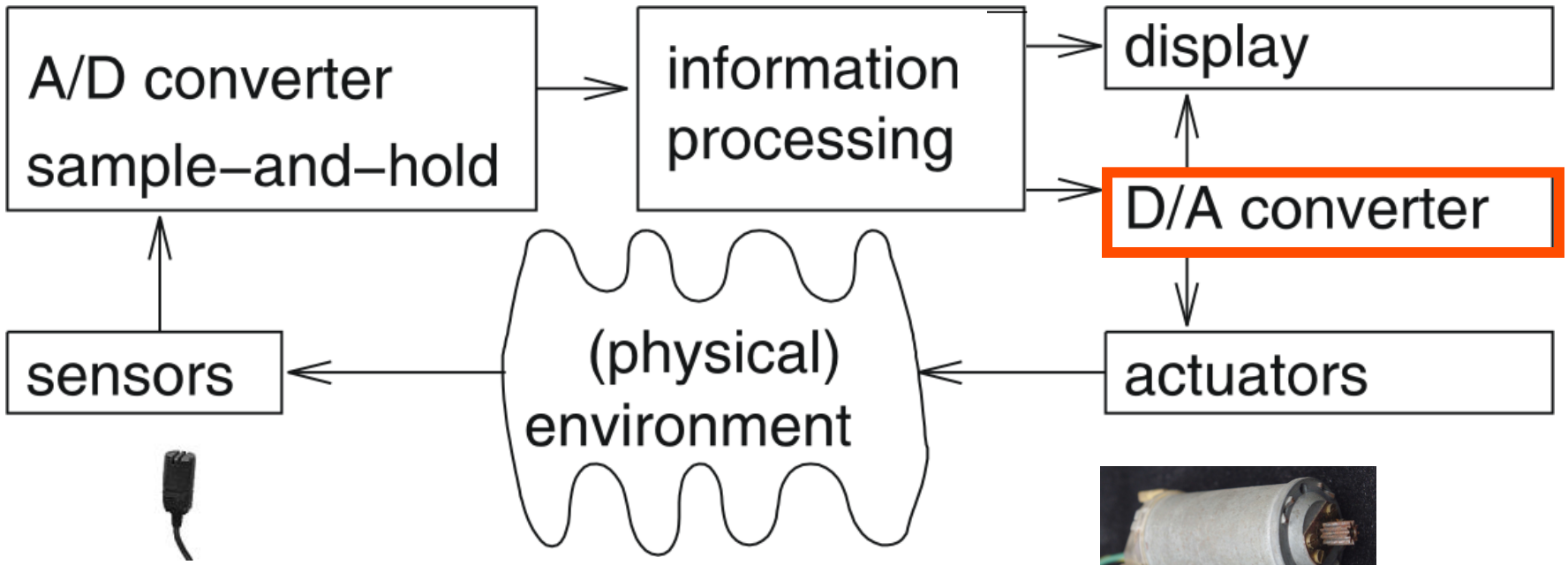

☞ cyber-physical systems

Kirchhoff‘s junction rule

Kirchhoff‘s Current Law, Kirchhoff‘s first rule

Kirchhoff’s Current Law:
At any point in an electrical circuit, the sum of currents flowing towards that point is equal to the sum of currents flowing away from that point.
(Principle of conservation of electric charge)

Example:

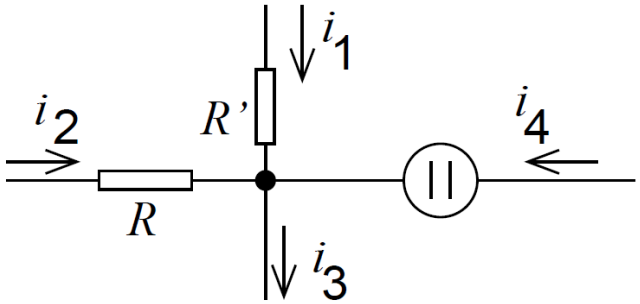

$$i_1 + i_2 + i_4 = i_3$$

$$i_1 + i_2 - i_3 + i_4 = 0$$

Formally, for any node in a circuit:

$$\sum_k i_k = 0$$

Count current flowing away from node as negative.

[Jewett and Serway, 2007].

Kirchhoff's loop rule

Kirchhoff‘s Voltage Law, Kirchhoff's second rule

The principle of conservation of energy implies that:

The sum of the potential differences (voltages) across all elements around any closed circuit must be zero

[Jewett and Serway, 2007].

Formally, for any loop in a circuit:

$$\sum_k V_k = 0$$

Count voltages traversed against arrow direction as negative

Example:

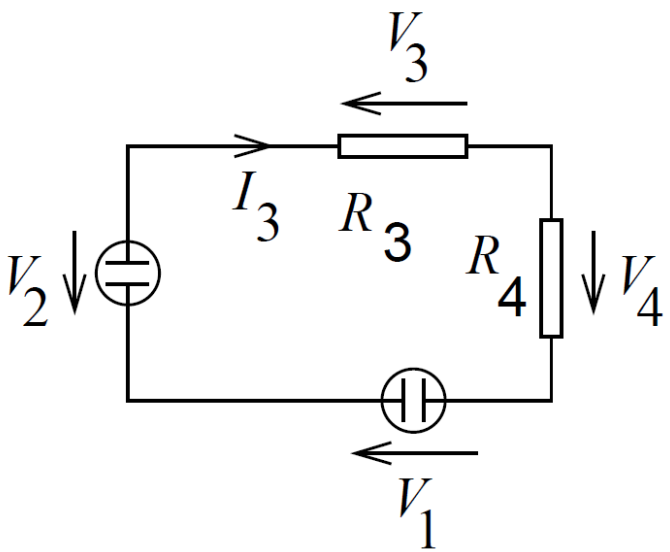

V_1-V_2-V_3+V_4=0

V_3=R_3×I_3 if current counted in the same direction as V_3

V_3=-R_3×I_3 if current counted in the opposite direction as V_3

Operational Amplifiers (Op-Amps)

Operational amplifiers (op-amps) are devices amplifying the voltage difference between two input terminals by a large gain factor g

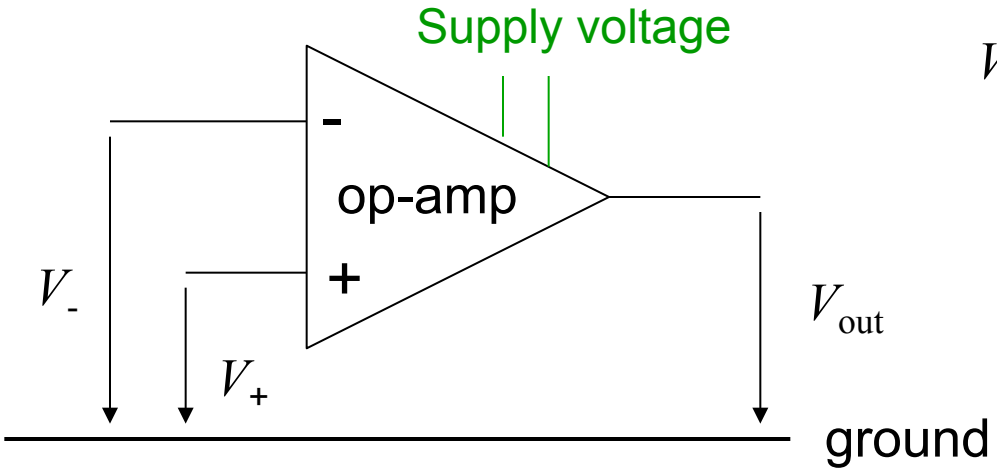

$$V_{out} = (V_+ - V_-) \cdot g$$

Op-amp in a DIL package

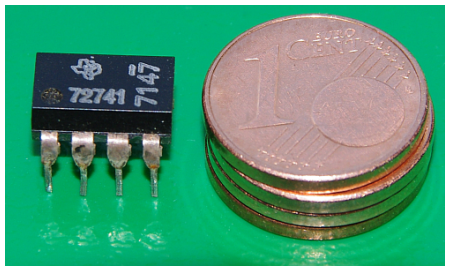

For an **ideal** op-amp: $g \rightarrow \infty$

(In practice: g may be around $10^4..10^6$)

Digital-to-Analog (D/A) Converters

Various types, can be quite simple, e.g.:

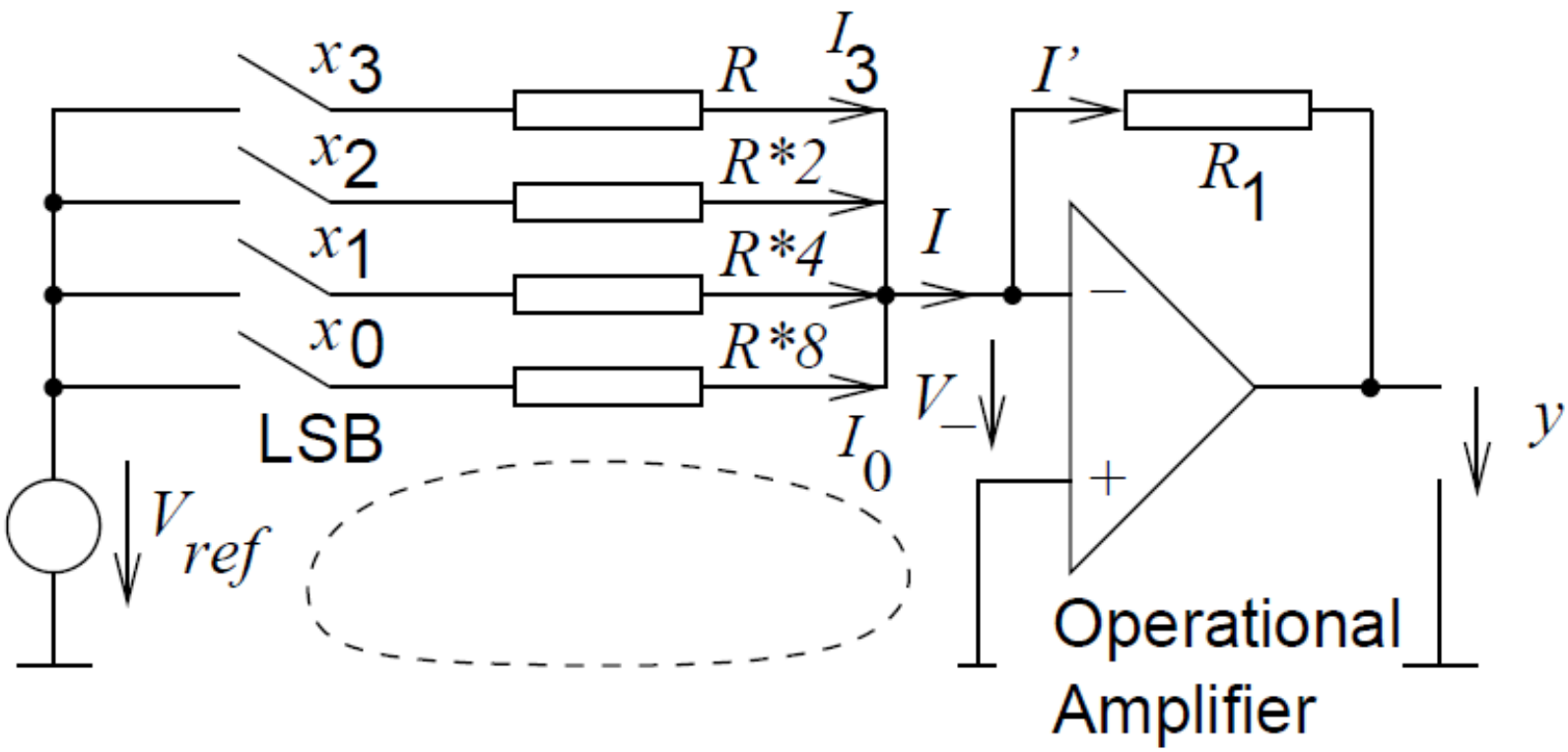

$$I = x_3 \times \frac{V_{ref}}{R} + x_2 \times \frac{V_{ref}}{2 \times R} + x_1 \times \frac{V_{ref}}{4 \times R} + x_0 \times \frac{V_{ref}}{8 \times R} = \frac{V_{ref}}{8 \times R} \times \sum_{i=0}^{3} x_i \times 2^i$$

Current I proportional to the number represented by x

Loop rule:

$$x_0 \cdot I_0 \cdot 8 \cdot R + V_- - V_{ref} = 0$$

☞ $$I_0 = x_0 \times \frac{V_{ref}}{8 \times R}$$

In general: $$I_i = x_i \times \frac{V_{ref}}{2^{3-i} \times R}$$

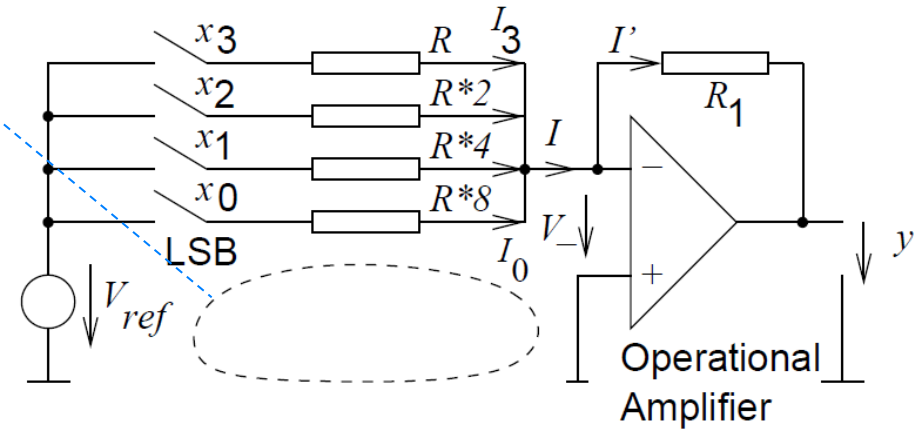

Junction rule: $$I = \sum_i I_i$$

☞ $$I = x_3 \times \frac{V_{ref}}{R} + x_2 \times \frac{V_{ref}}{2 \times R} + x_1 \times \frac{V_{ref}}{4 \times R} + x_0 \times \frac{V_{ref}}{8 \times R} = \frac{V_{ref}}{8 \times R} \times \sum_{i=0}^{3} x_i \times 2^i$$

$I \sim nat\,(x)$, where $nat(x)$: natural number represented by x;

Output voltage proportional to the number represented by x

Loop rule*: $y + R_1 \times I' = 0$

Junction rule°: $I = I'$

☞ $y + R_1 \times I = 0$

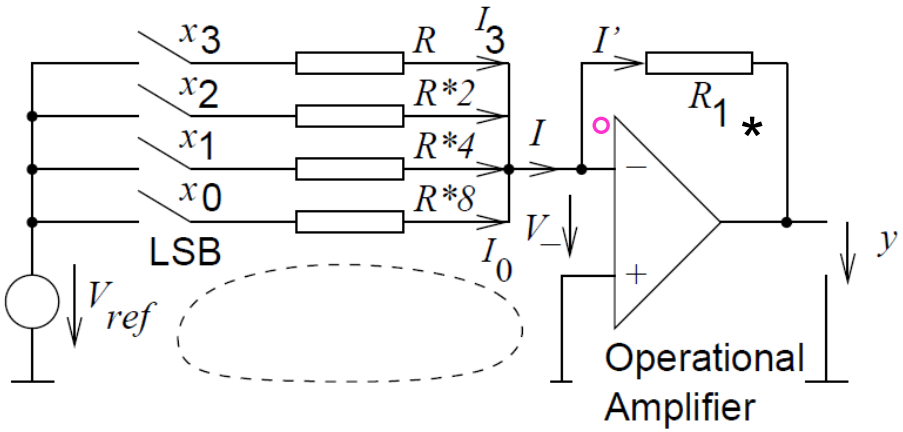

From the previous slide

$$I = \frac{V_{ref}}{8 \times R} \times \sum_{i=0}^{3} x_i \times 2^i$$

Hence:

$$y = -V_{ref} \times \frac{R_1}{8 \times R} \sum_{i=0}^{3} x_i \times 2^i = -V_{ref} \times \frac{R_1}{8 \times R} \times nat(x)$$

Op-amp turns current $I \sim nat\ (x)$ into a voltage $\sim nat\ (x)$

Output generated from signal $e_3(t)$

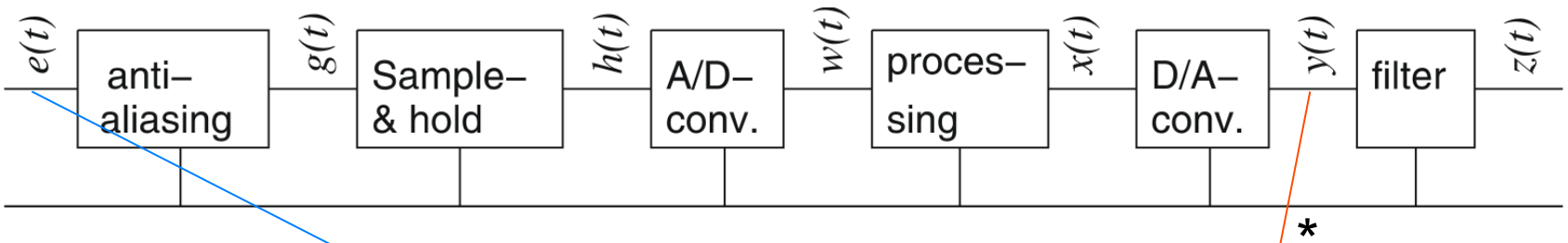

* Assuming "zero-order hold"

Possible to reconstruct input signal?

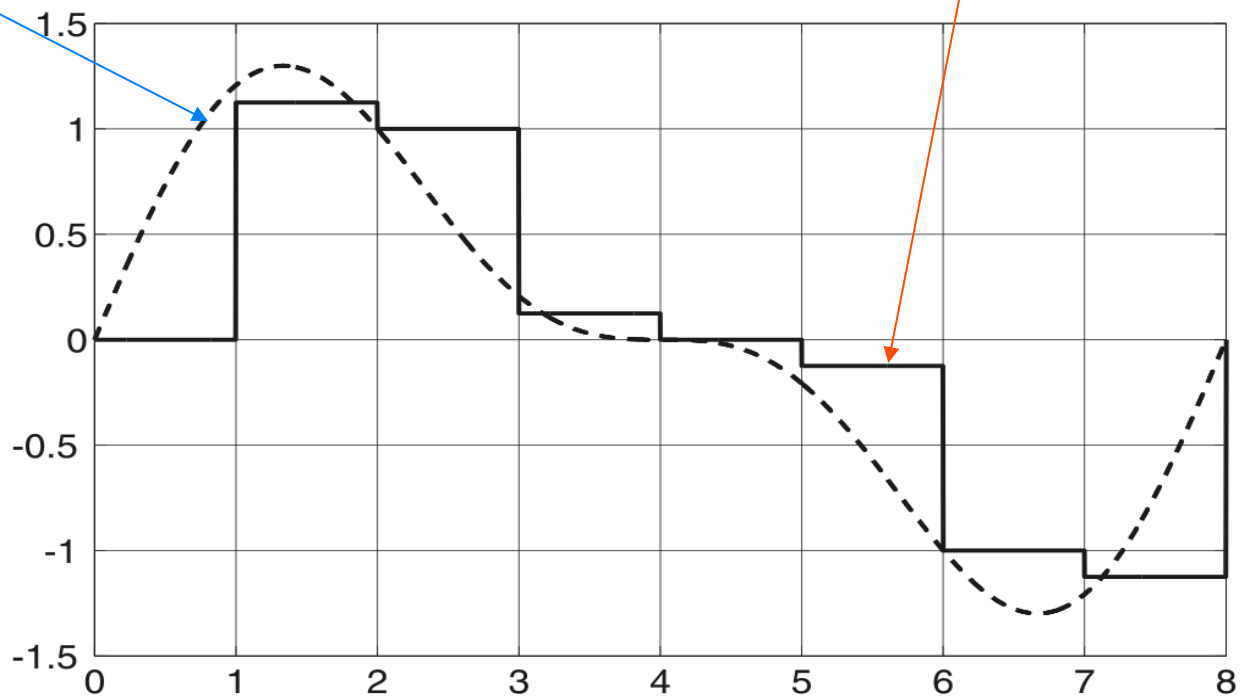

Sampling Theorem

Possible to reconstruct input signal?

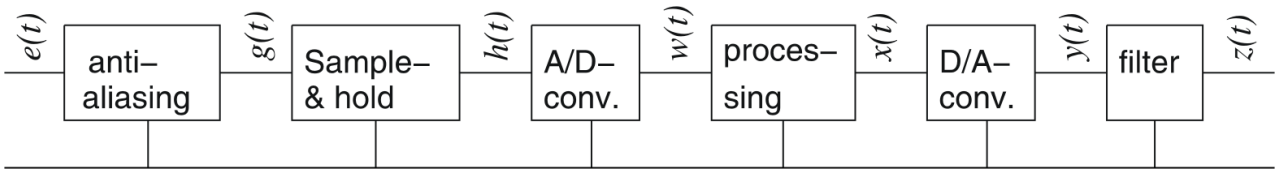

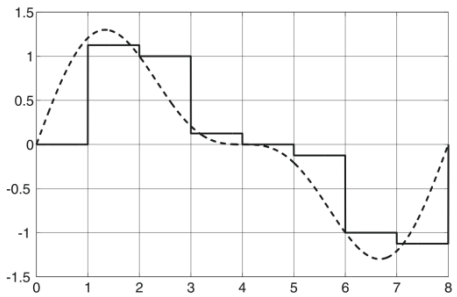

- Assuming Nyquist criterion met
- Let $\{t_s\}$, $s = ...,-1,0,1,2, ...$ be times at which we sample $g(t)$
- Assume a constant sampling rate of $1/p_s$ ($\forall s$: $p_s = t_{s+1} - t_s$).
- According sampling theory, we can approximate the input signal as follows:

$$z(t) = \sum_{s=-\infty}^{\infty} \frac{y(t_s) \sin \frac{\pi}{p_s}(t - t_s)}{\frac{\pi}{p_s}(t - t_s)}$$

Weighting factor for influence of $y(t_s)$ at time t

Called sinc function

[Oppenheim, Schafer, 2009]

Weighting factor for influence of $y(t_s)$ at time t

$$sinc(t - t_s) = \frac{sin\left(\frac{\pi}{p_s}(t - t_s)\right)}{\frac{\pi}{p_s}(t - t_s)}$$

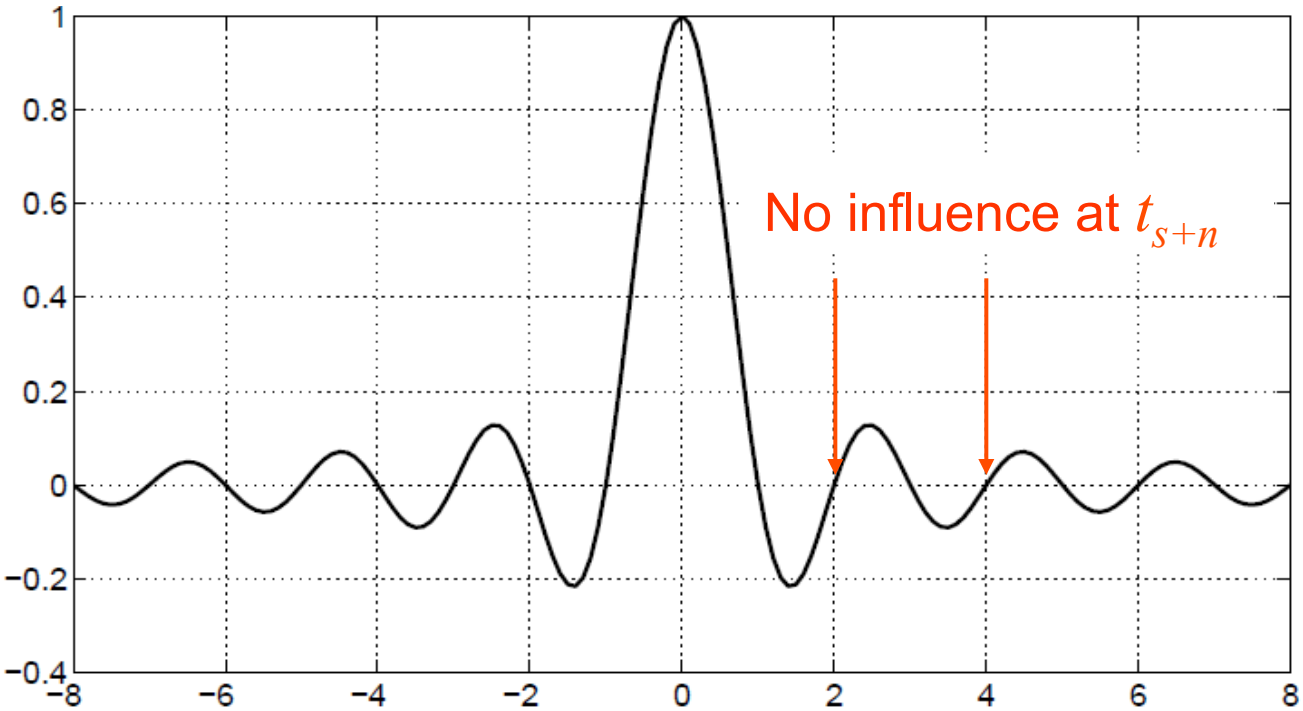

Contributions
from the various sampling instances

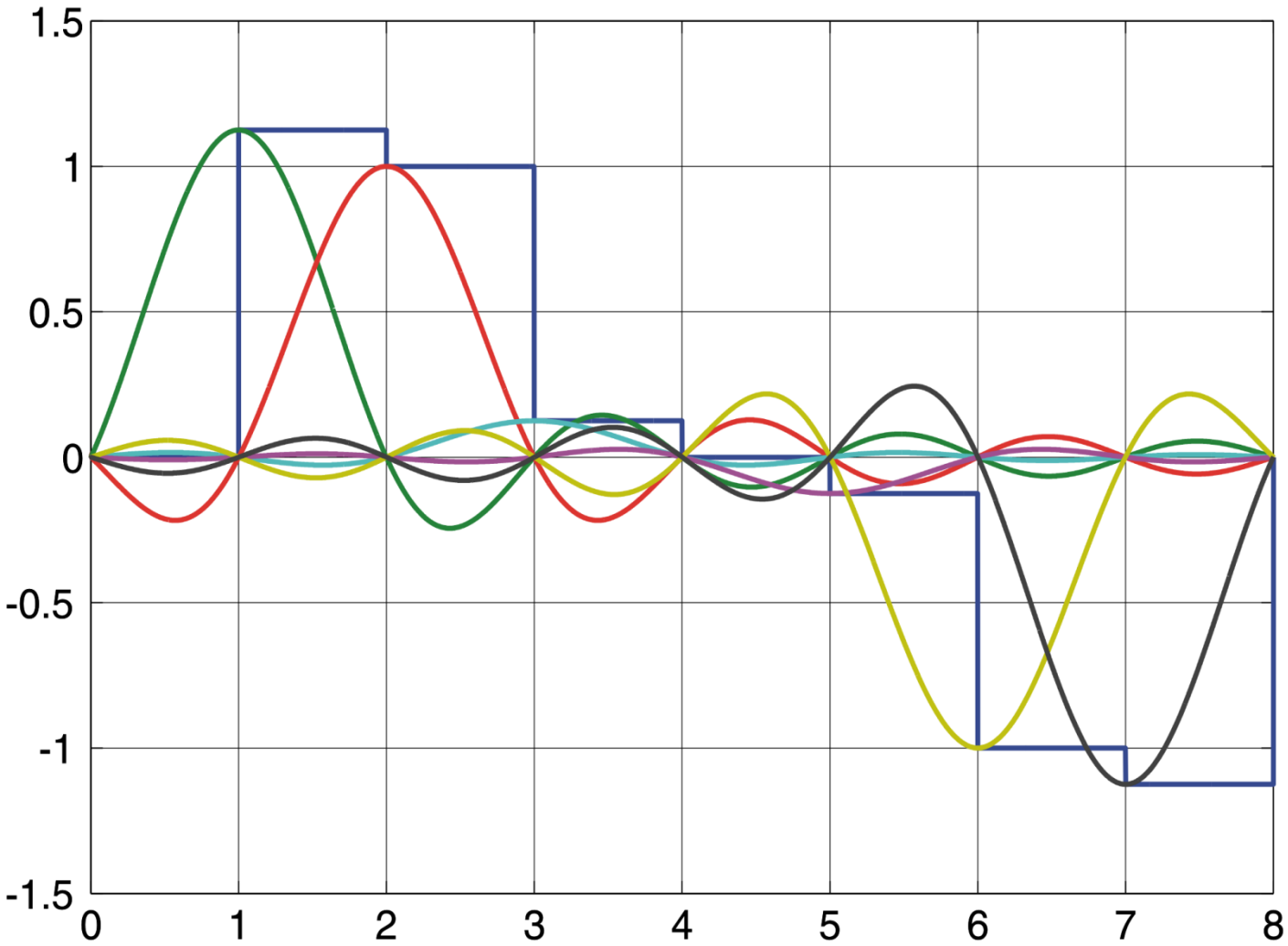

(Attempted) reconstruction of input signal

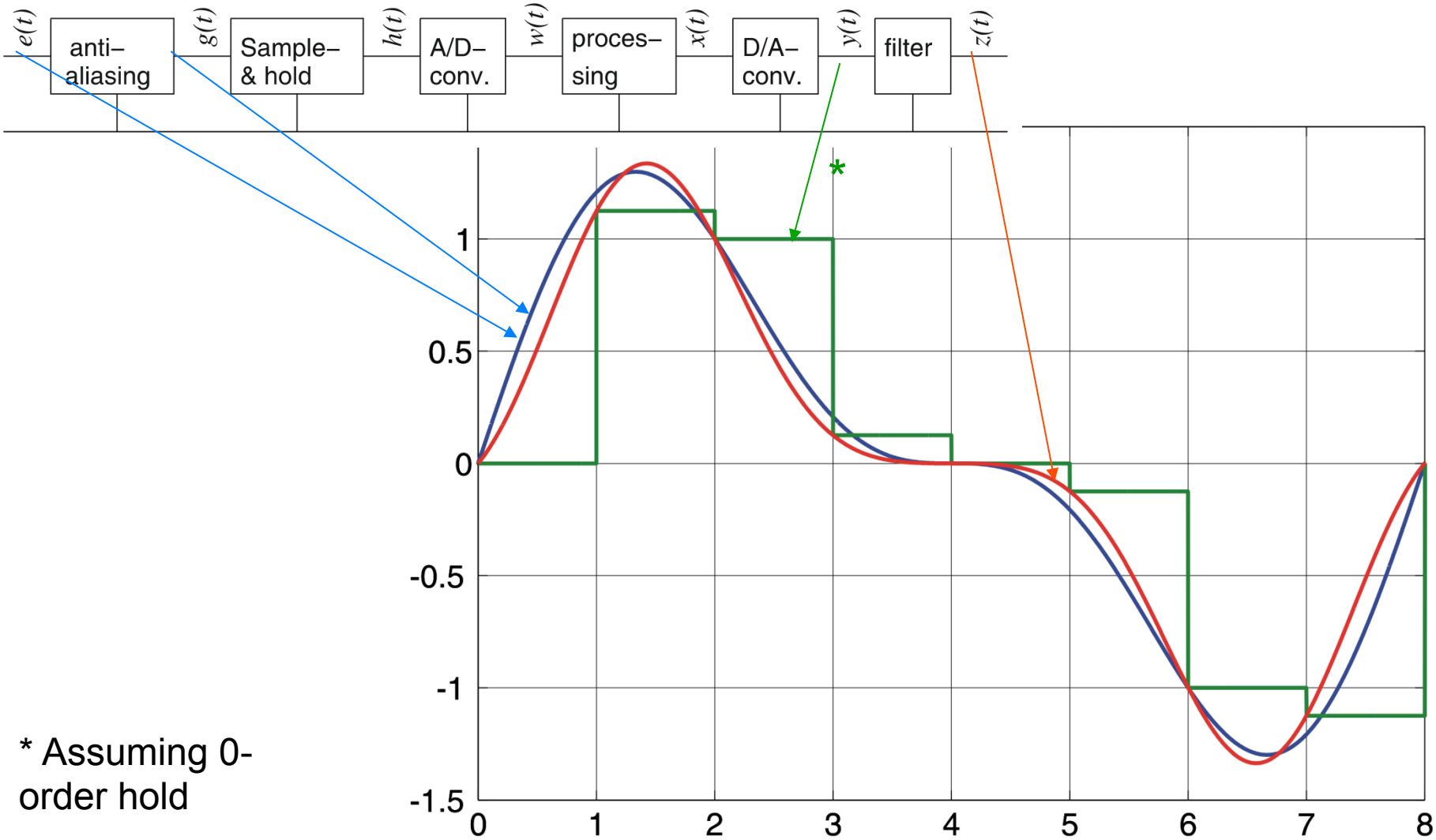

* Assuming 0-order hold

How precisely are we reconstructing the input?

$$z(t) = \sum_{s=-\infty}^{\infty} \frac{y(t_s) sin \frac{\pi}{T_s}(t - t_s)}{\frac{\pi}{T_s}(t - t_s)}$$

- **Sampling theory**:
  - **Reconstruction using *sinc* () is precise**
- However, it may be impossible to really compute $z(t)$ as indicated ….

How to compute the *sinc*( ) function?

$$z(t) = \sum_{s=-\infty}^{\infty} \frac{y(t_s) sin \frac{\pi}{T_s}(t - t_s)}{\frac{\pi}{T_s}(t - t_s)}$$

- **Filter theory:** The required interpolation is performed by an ideal low-pass filter (*sinc* is the Fourier transform of the low-pass filter transfer function)

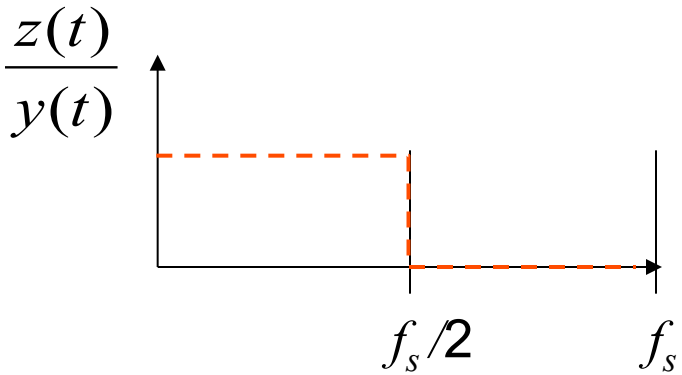

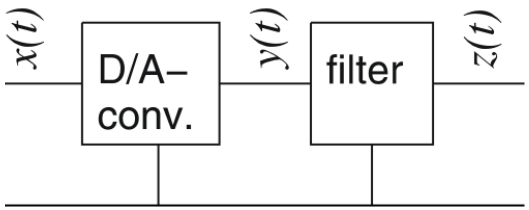

Filter removes high frequencies present in $y(t)$

Limitations

$$z(t) = \sum_{s=-\infty}^{\infty} \frac{y(t_s) sin \frac{\pi}{T_s}(t - t_s)}{\frac{\pi}{T_s}(t - t_s)}$$

- Actual filters do not compute $sinc(\ )$
  In practice, filters are used as an approximation.
  Computing good filters is an art itself!
- All samples must be known to reconstruct $e(t)$ or $g(t)$.
  ☞ Waiting indefinitely before we can generate output!
  In practice, only a finite set of samples is available.
- Actual signals are never perfectly bandwidth limited.
- Quantization noise cannot be removed.

Actuators/Display

Embedded System Hardware

Embedded system hardware is frequently used in a loop (***"hardware in a loop"***):

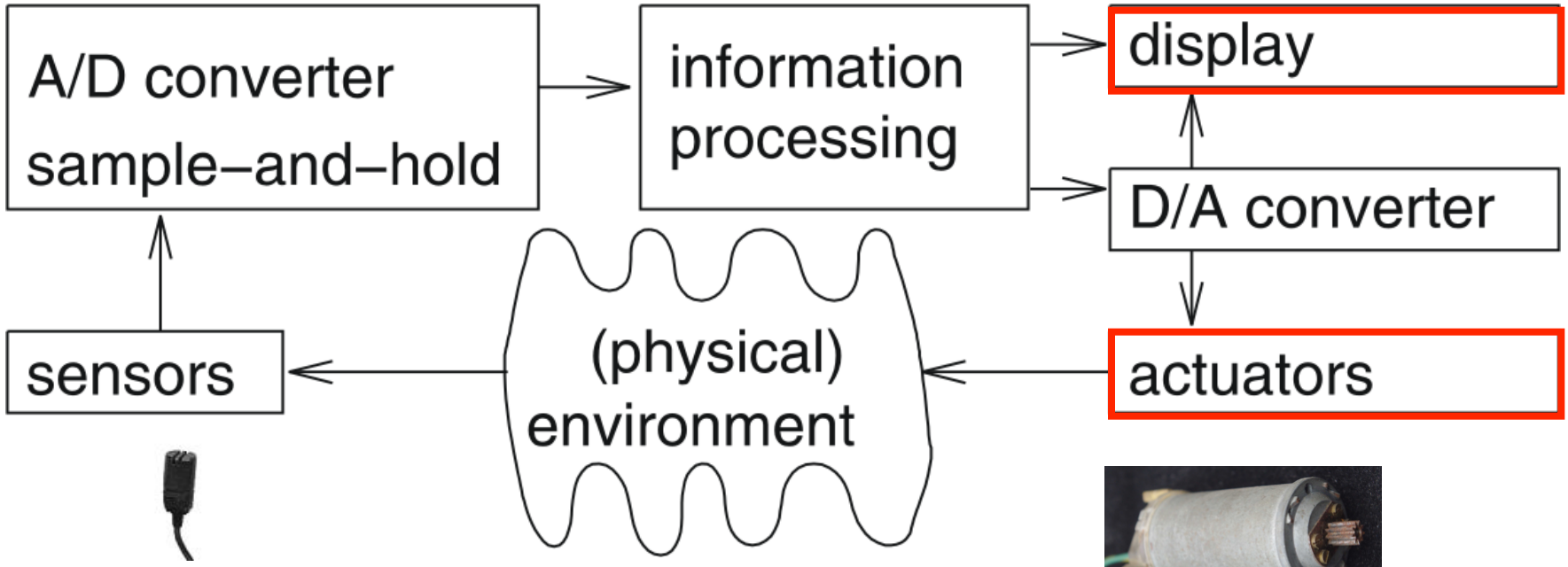

☞ cyber-physical systems

Output

Output devices of embedded systems include

- **Displays:** Display technology is extremely important. Major research and development efforts

- **Electro-mechanical devices:** these influence the environment through motors and other electro-mechanical equipment.
  Frequently require analog output.

Actuators

Huge variety of actuators and output devices, impossible to present all of them.
Motor as an example

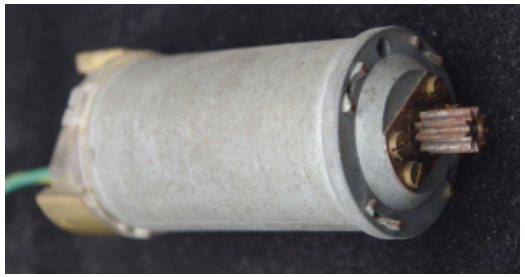

Actuators (2)

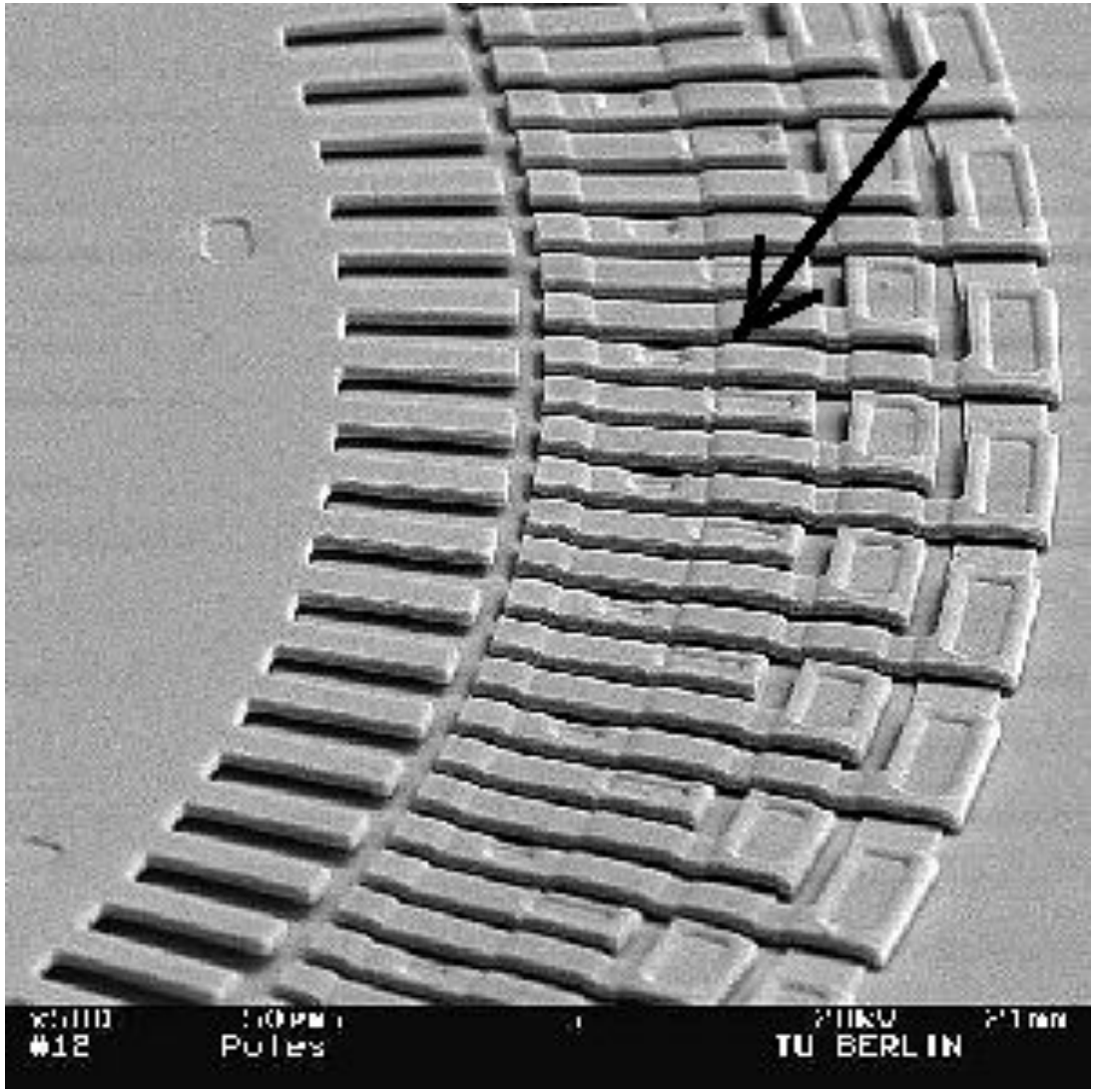

Courtesy and ©: E. Obermeier, MAT, TU Berlin

http://www.piezomotor.se/pages/PWtechnology.html

http://www.elliptec.com/fileadmin/elliptec/User/Produkte/Elliptec_Motor/Elliptecmotor_How_it_works.h

Secure Hardware

- Security needed for communication & storage
- Demand for special equipment for cryptographic keys
- To resist side-channel attacks like
  - measurements of the supply current or
  - Electromagnetic radiation.

  Special mechanisms for physical protection (shielding, sensor detecting tampering with the modules).
- Logical security, using cryptographic methods needed.
- Smart cards: special case of secure hardware
  - Have to run with a very small amount of energy.
- In general, we have to distinguish between different levels of security and knowledge of “adversaries”

Summary

Hardware in a loop

- Sensors
- Discretization
- Information processing
  - Importance of energy efficiency, Special purpose HW very expensive, Energy efficiency of processors, Code size efficiency, Run-time efficiency
  - Reconfigurable Hardware
- Communication
- D/A converters
- Sampling theorem
- Actuators (briefly)
- Secure hardware (briefly)