Task Execution

(slides are based on Prof. Dr. Jian-Jia Chen and http://www.freertos.org)

Anas Toma

LS 12, TU Dortmund

December 6, 2018

Task Creation (Recall)

- All the related information of a task is stored in a task control block (TCB) so that the operating systems can use it for operating on a task.

Top of Stack	pointer to the last item place on the stack for the task
Task State	list item used to place the TCB in ready and blocked queues
Event List	list item used to place the TCB in the event lists
Priority	task priority (0=lowest)
Stack Start	pointer to the start of the process stack
Others	other information

Task Execution Sequence

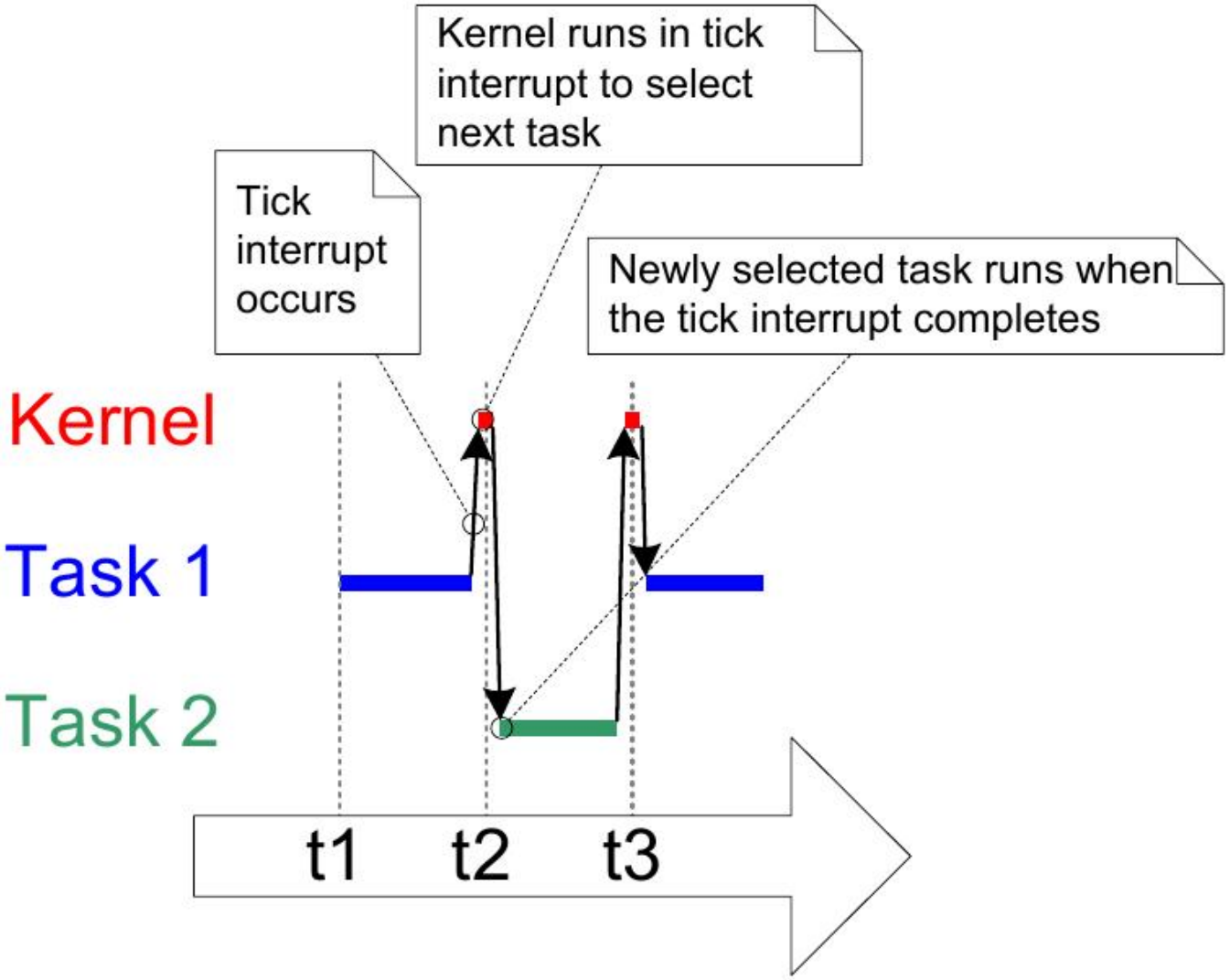

[http://www.freertos.org]

Task Execution - Prior to the RTOS tick interrupt

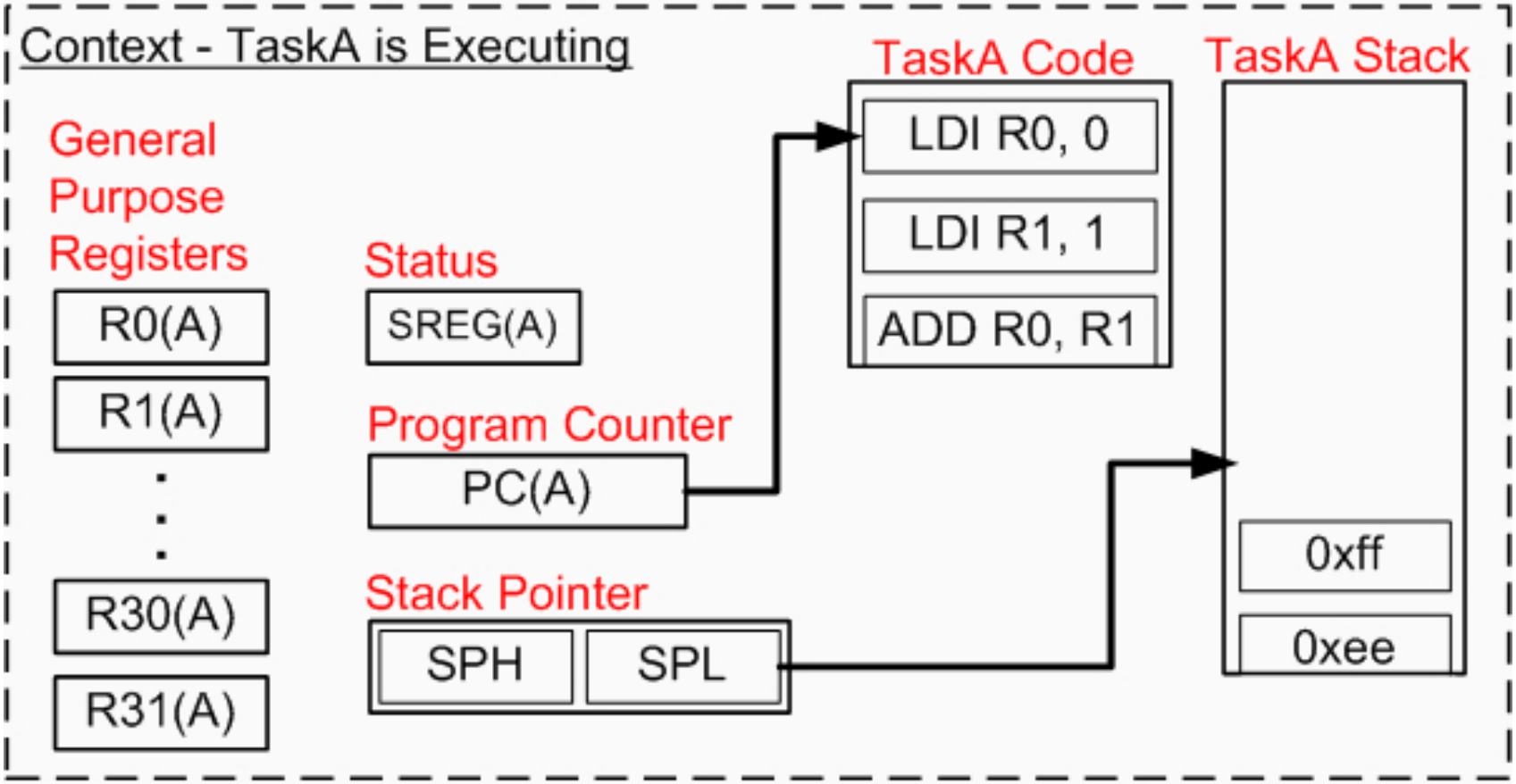

[http://www.freertos.org]

Task Execution - RTOS tick interrupt occurs

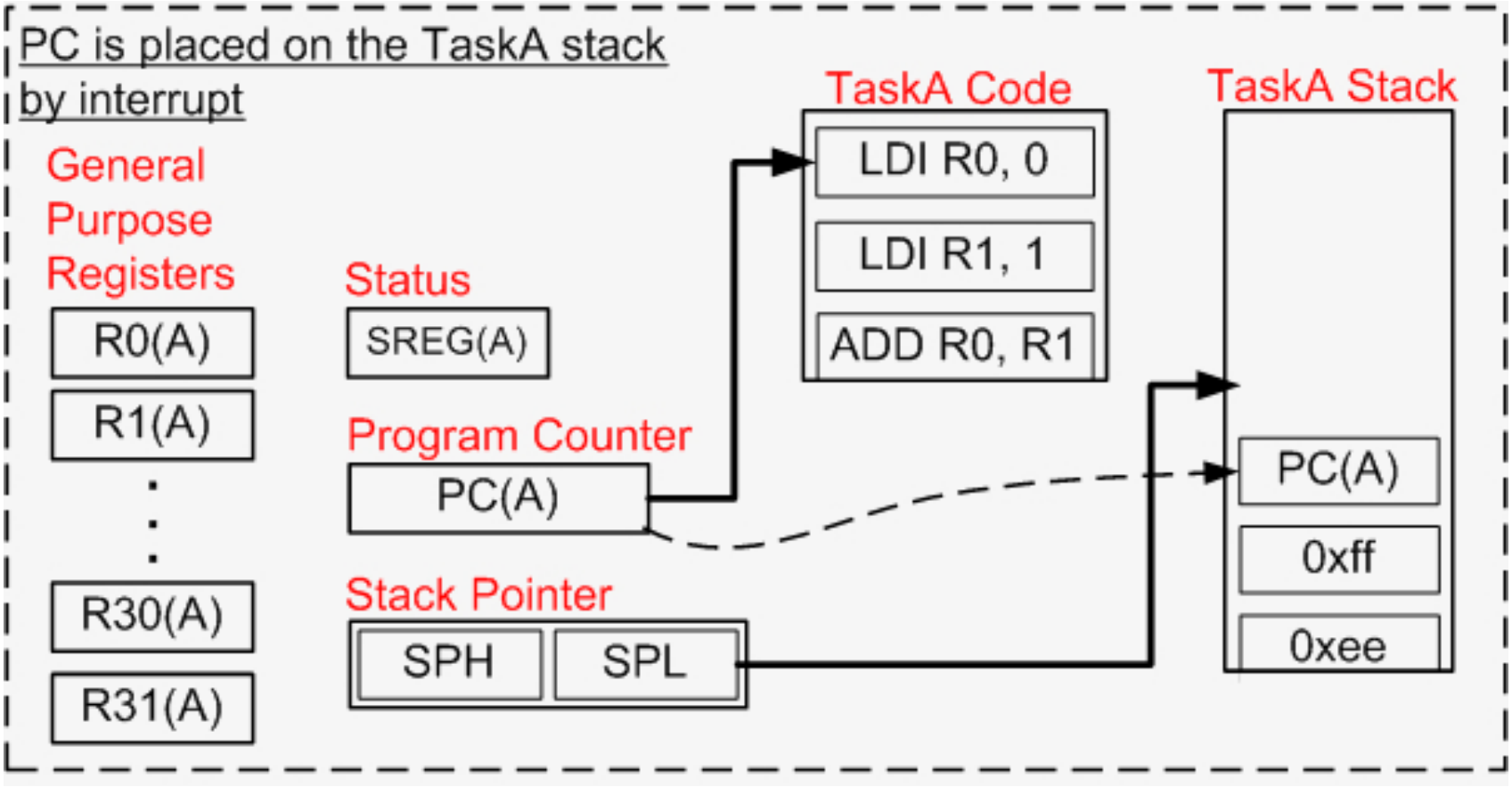

[http://www.freertos.org]

Task Execution - RTOS tick interrupt is executed

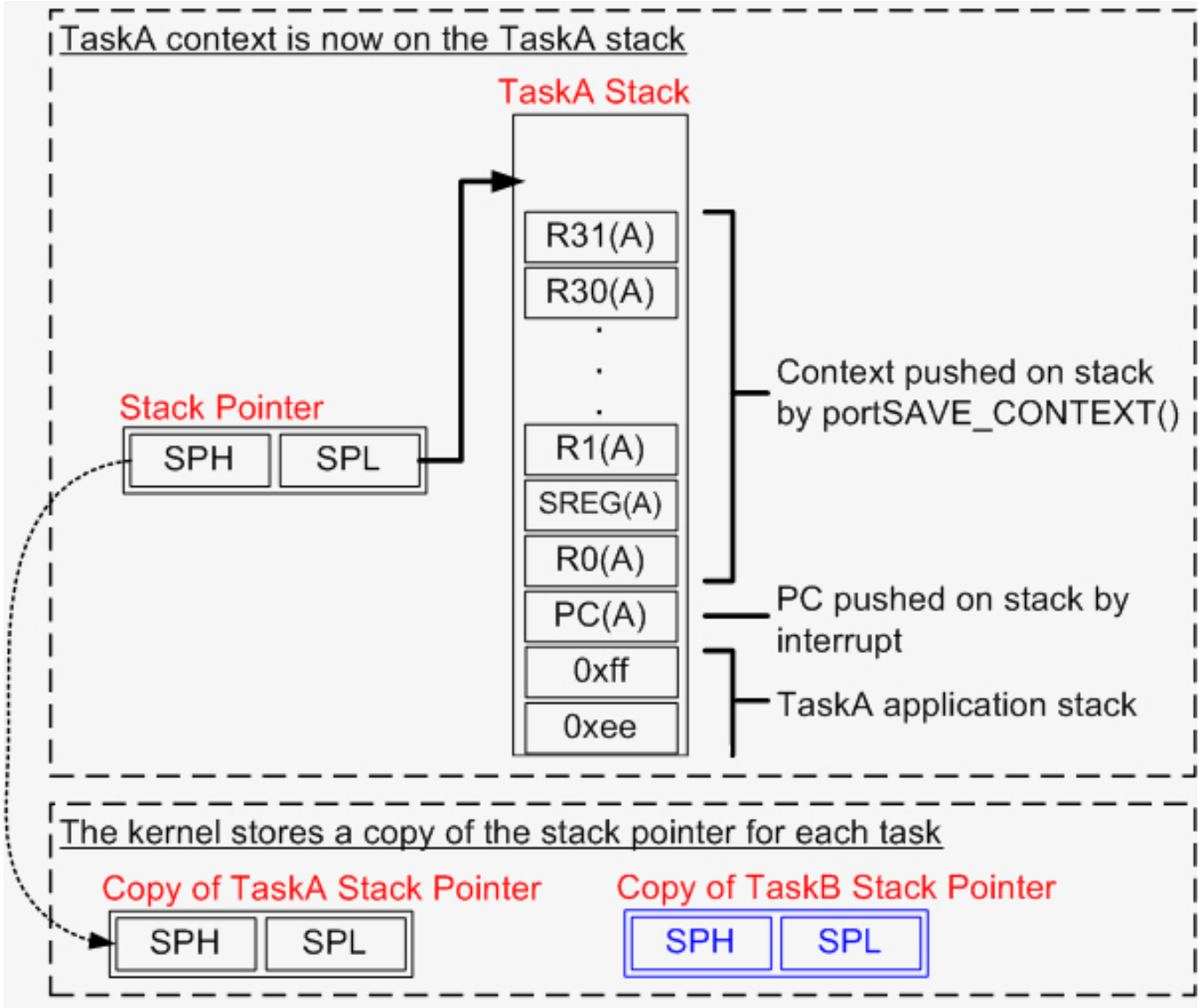

[http://www.freertos.org]

Incrementing the Tick Count

- *vTaskIncrementTick()* executes after the TaskA context has been saved.
- TaskB has higher priority than TaskA and is ready to run.
- *vTaskSwitchContext()* selects TaskB as the task to be given processing time when the ISR completes.

Task Execution - TaskB stack pointer is retrieved

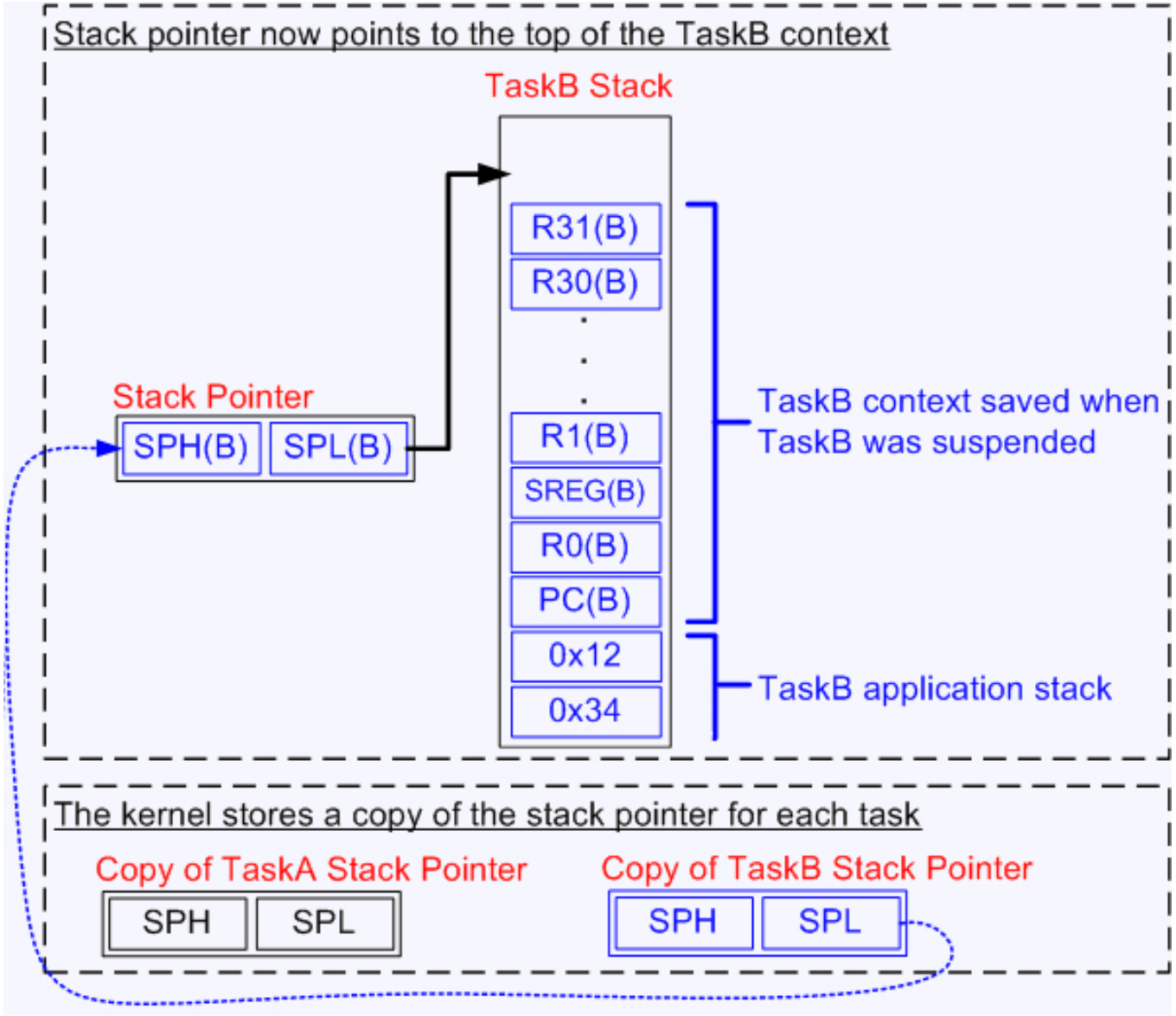

[http://www.freertos.org]

Task Execution - Restore the context of TaskB

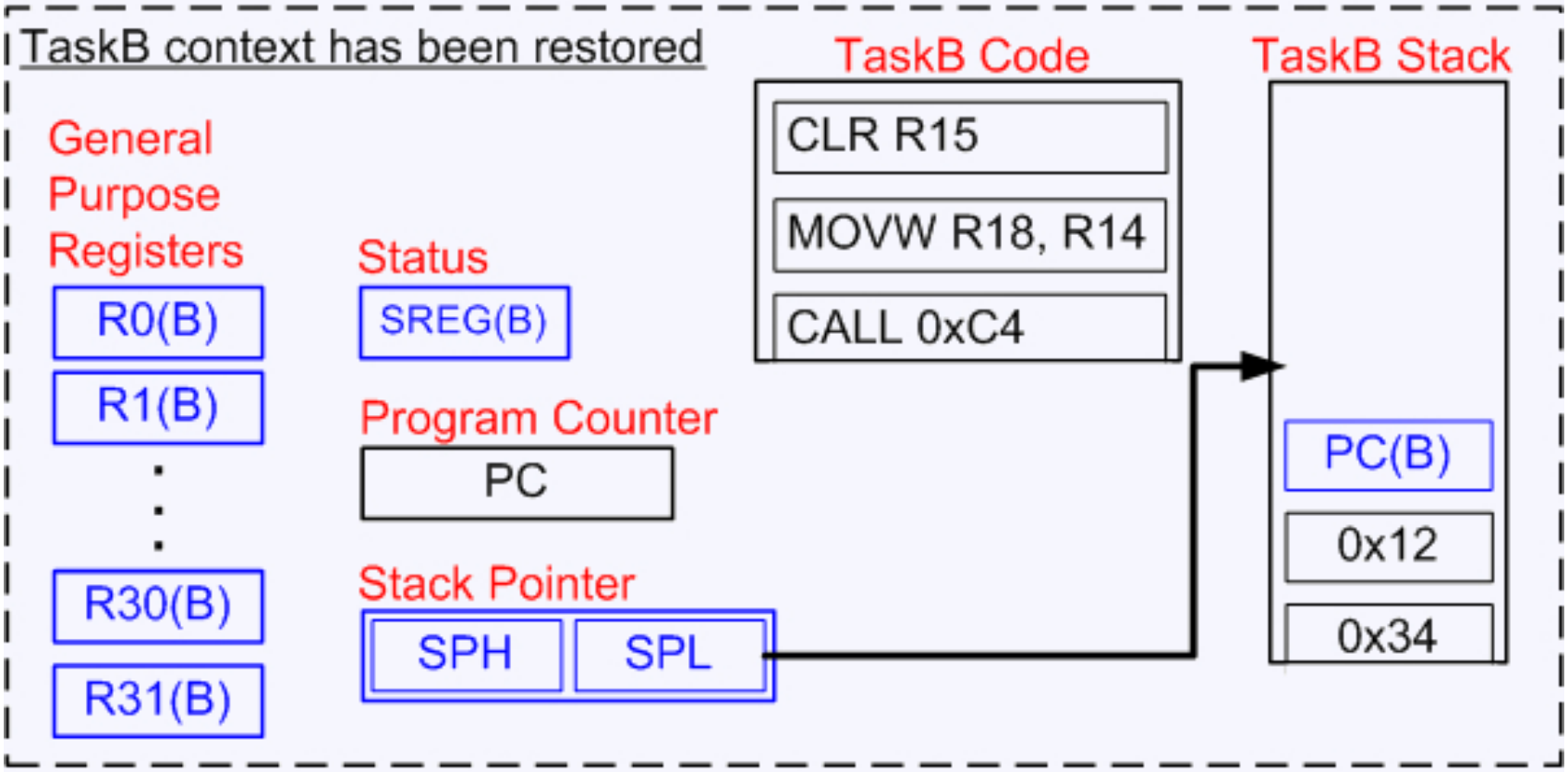

[http://www.freertos.org]

Task Execution - The RTOS tick exits

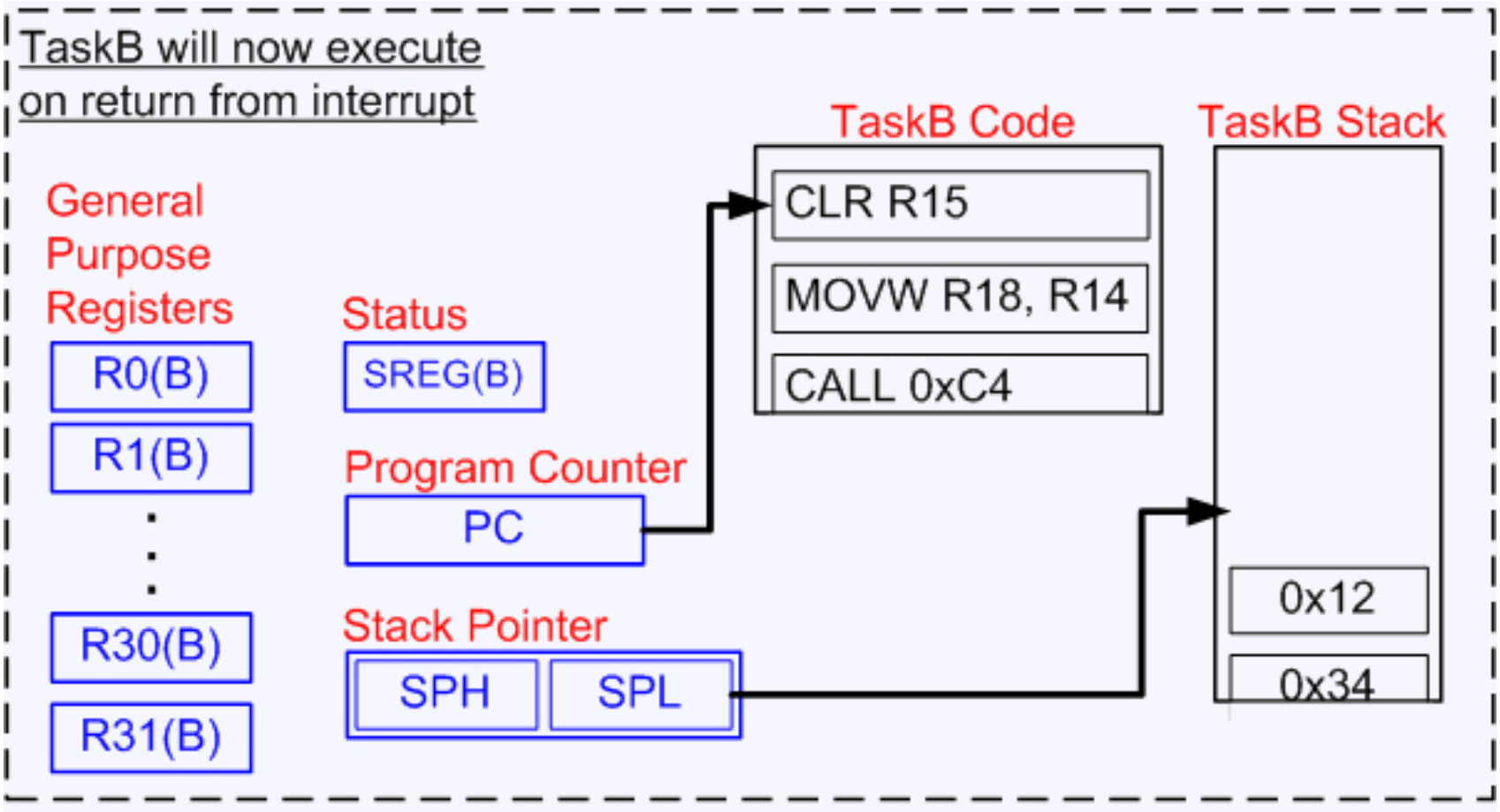

[http://www.freertos.org]

Task Control Block and Task Execution

- Central Processing Unit (CPU)
  - Program Counter (PC), Stack Pointer (SP), Registers (Reg)
- Task Control Block (TCB)
  - Stack pointer, Waiting time (Tme), priority (Prio)

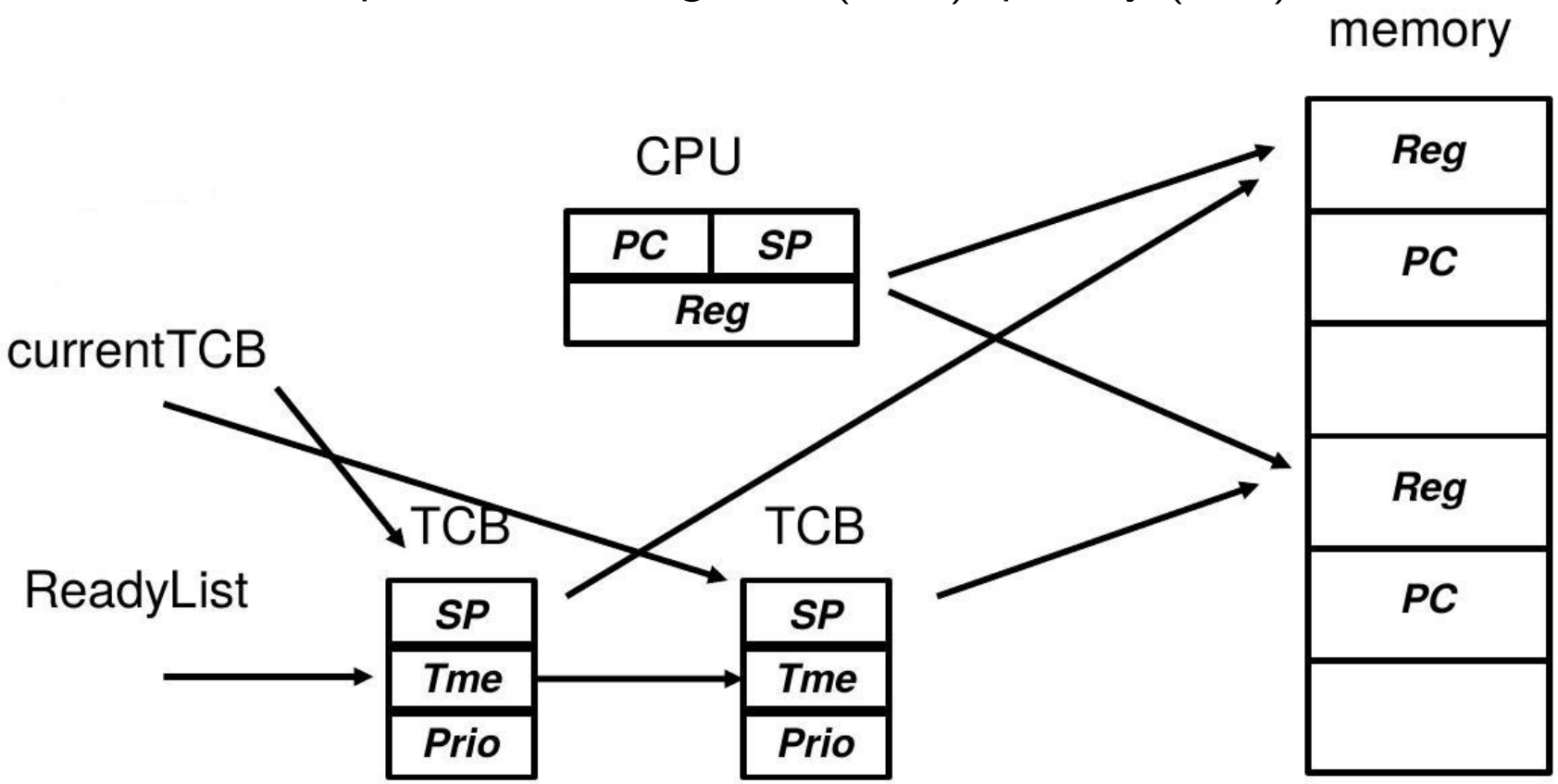

Task Control Block in FreeRTOS - struct tskTaskControlBlock

```
1 typedef struct tskTaskControlBlock{
2 volatile portSTACK_TYPE *pxTopOfStack; /*< Points to the ↩
      location of the last item placed on the tasks stack. ↩
      */
3
4 ...
5
6 xListItem xGenericListItem; /*< List item used to place ↩
      the TCB in ready and blocked queues. */
7 xListItem xEventListItem; /*< List item used to place the ↩
      TCB in event lists. */
8 unsigned portBASE_TYPE uxPriority; /*< The priority of the↩
       task where 0 is the lowest priority. */
9 portSTACK_TYPE *pxStack; /*< Points to the start of the ↩
      stack. */
10 signed char pcTaskName[ configMAX_TASK_NAME_LEN ];/*< ↩
      Descriptive name given to the task when created. ↩
      Facilitates debugging only. */
11
12 .....
13
14 } tskTCB;
```

xTaskGenericCreate

```
signed portBASE_TYPE xTaskGenericCreate( ... ){
...
tskTCB * pxNewTCB;
configASSERT( pxTaskCode );
configASSERT( ( ( uxPriority & ( ~portPRIVILEGE_BIT ) ) < configMAX_PRIORITIES ) );
/* Allocate the memory required by the TCB and stack for the new task, checking that the allocation was successful. */
pxNewTCB = prvAllocateTCBAndStack( usStackDepth, puxStackBuffer );
if( pxNewTCB != NULL ) {
....
/* Setup the newly allocated TCB with the initial state of the task. */
prvInitialiseTCBVariables( pxNewTCB, pcName, uxPriority, xRegions, usStackDepth );
....
```

xTaskGenericCreate (cont.)

```
/* We are going to manipulate the task queues to add this task to a ready list, so must make sure no interrupts occur. */
taskENTER_CRITICAL(); {
uxCurrentNumberOfTasks++;
if( pxCurrentTCB == NULL ) {
/* There are no other tasks, or all the other tasks are in the suspended state - make this the current task. */
pxCurrentTCB =  pxNewTCB;
....}
else{
/* If the scheduler is not already running, make this task the current task if it is the highest priority task to be created so far. */
if( xSchedulerRunning == pdFALSE ){
if( pxCurrentTCB->uxPriority <= uxPriority ){
pxCurrentTCB = pxNewTCB;}
}
}
....
```

xTaskGenericCreate (cont.)

```
prvAddTaskToReadyQueue( pxNewTCB );
xReturn = pdPASS;
...}
taskEXIT_CRITICAL();
}
...
if( xReturn == pdPASS ){
if( xSchedulerRunning != pdFALSE ){
/* If the created task is of a higher priority than the current task then it should run now. */
if( pxCurrentTCB->uxPriority < uxPriority ){
portYIELD_WITHIN_API();
}
}
}
return xReturn;
}
```

Lets read the source code for a while.